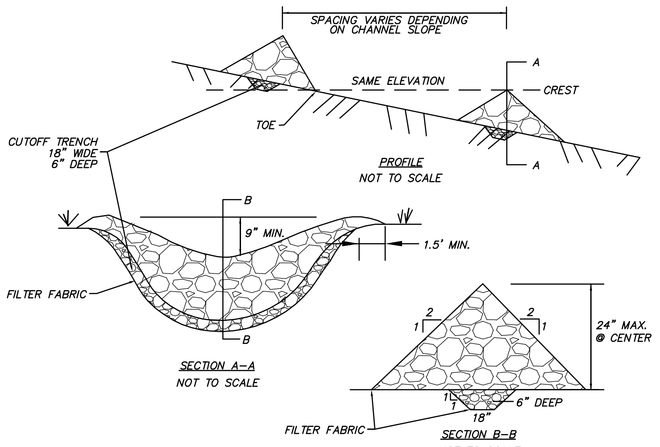

CONSTRUCTION SPECIFICATIONS

1. STONE WILL BE PLACED ON A FILTER FABRIC FOUNDATION TO THE LINES, GRADES & LOCATIONS SHOWN ON PLAN.
2. SET SPACING OF CHECK DAMS TO ASSUME THAT THE ELEVATIONS OF THE CREST OF THE DOWNSTREAM DAM IS AT THE SAME ELEVATION OF THE TOE OF THE UPSTREAM DAM.
3. EXTEND THE STONE A MINIMUM OF 1.5 FEET BEYOND THE DITCH BANKS TO PREVENT CUTTING AROUND THE DAM.
4. PROTECT THE CHANNEL DOWNSTREAM OF THE LOWEST CHECK DAM FROM SCOUR AND EROSION WITH STONE OR LINER AS APPROPRIATE.
5. ENSURE THAT CHANNEL APPURTENANCES SUCH AS CULVERT ENTRANCES BELOW CHECK DAMS ARE NOT SUBJECT TO DAMAGE OR BLOCKAGE FROM DISPLACED STONES.

STONE SIZE: USE GRADED STONE 2 TO 15 INCHES IN SIZE (NYSDOT LIGHT STONE FILL MEETS THESE REQUIREMENTS).

MAXIMUM DRAINAGE AREA: 2 ACRES

STONE CHECK DAM DETAIL

NO SCALE

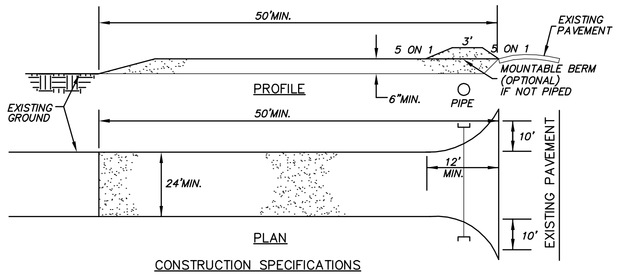

CONSTRUCTION SPECIFICATIONS

1. STONE SIZE– USE 1"–4" STONE, OR RECLAIMED OR RECYCLED CONCRETE EQUIVALENT.
2. LENGTH – AS REQUIRED, BUT NOT LESS THAN 30 FEET
3. THICKNESS – NOT LESS THAN SIX (6) INCHES.
4. WIDTH – NOT LESS THAN THE FULL DRIVEWAY WIDTH AT POINTS WHERE INGRESS OR EGRESS OCCURS. 24' MINIMUM IF SINGLE ENTRANCE TO SITE.
5. FILTER CLOTH – WILL BE PLACED OVER THE ENTIRE AREA PRIOR TO PLACING OF STONE.
6. SURFACE WATER – ALL SURFACE WATER FLOWING OR DIVERTED TOWARD CONSTRUCTION ENTRANCES SHALL BE PIPED ACROSS THE ENTRANCE. IF PIPING IS IMPRACTICAL, A MOUNTABLE BERM WITH 5:1 SLOPES WILL BE PERMITTED.
7. MAINTENANCE – THE ENTRANCE SHALL BE MAINTAINED IN A CONDITION WHICH WILL PREVENT TRACKING OR FLOWING OF SEDIMENT ONTO PUBLIC RIGHT–OF–WAYS. THIS MAY REQUIRE PERIODIC TOP DRESSING WITH ADDITIONAL STONE, AS CONDITIONS DEMAND, AND REPAIR AND/OR CLEAN–ING OF ANY MEASURES USED TO TRAP SEDIMENT.
8. WASHING – WHEELS SHALL BE CLEANED WHEN NECESSARY TO REMOVE SEDIMENT PRIOR TO ENTRANCE ONTO PUBLIC RIGHTS–OF–WAY. WHEN WASHING IS REQUIRED, IT SHALL BE DONE ON AN AREA STABILIZED WITH STONE AND WHICH DRAINS INTO AN APPROVED SEDIMENT TRAPPING DEVICE.
9. PERIODIC INSPECTION AND NEEDED MAINTENANCE SHALL BE PROVIDED AFTER EACH RAIN.

STABILIZED CONSTRUCTION ENTRANCE DETAIL

NO SCALE

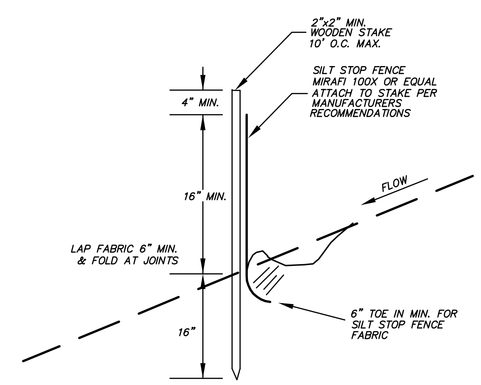

CONSTRUCTION SPECIFICATIONS

1. WOVEN WIRE FENCE TO BE FASTENED SECURELY TO FENCE POSTS WITH WIRE TIES OR STAPLES. POSTS SHALL BE STEEL EITHER "T" OR "U" TYPE OR HARDWOOD.
2. FILTER CLOTH TO BE FASTENED SECURELY TO WOVEN WIRE FENCE WITH TIES SPACED EVERY 24" AT TOP AND MID SECTION. FENCE SHALL BE WOVEN WIRE, 6" MAXIMUM MESH OPENING.
3. WHEN TWO SECTIONS OF FILTER CLOTH ADJOIN EACH OTHER THEY SHALL BE OVERLAPPED BY SIX INCHES AND FOLDED. FILTER CLOTH SHALL BE EITHER FILTER X, MIRAFI 100X, STABILINKA T140N, OR APPROVED EQUIVALENT.
4. PREFABRICATED UNITS SHALL BE GEOFAB, ENVIROFENCE, OR APPROVED EQUIVALENT.
5. MAINTENANCE SHALL BE PERFORMED AS NEEDED AND MATERIAL REMOVED WHEN "BULGES" DEVELOP IN THE SILT FENCE.

SILT FENCE DETAIL

NO SCALE

STORMWATER AND EROSION CONTROL NOTES:

THE OWNER AND CONTRACTOR SHALL COMPLY WITH THE STORMWATER POLLUTION PREVENTION PLAN (SWPPP) PREPARED FOR THIS PROJECT AND AS A MINIMUM IMPLEMENT THE FOLLOWING EROSION AND SEDIMENT CONTROL MEASURES:

- CONSTRUCTION AND MAINTENANCE OF EROSION AND SEDIMENT CONTROL MEASURES IN ACCORDANCE WITH THE NEW YORK GUIDELINES FOR URBAN EROSION AND SEDIMENT CONTROL.
- INSTALLATION OF EROSION AND SEDIMENT CONTROL MEASURES AS SHOWN ON THE PLANS OR DETAILS AND AS NEEDED DURING THE GENERAL COURSE OF WORK.
- SOIL EROSION WILL OCCUR AFTER EVERY RAINFALL UNTIL TURF IS ESTABLISHED. IT SHALL BE THE CONTRACTORS RESPONSIBILITY TO REPAIR EROSION AFTER EVERY RAINFALL. FAILURE TO REPAIR MINOR EROSION WILL RESULT IN MAJOR EROSION AND POSSIBLY PAVEMENT AND STRUCTURE FAILURE. PRIOR TO SITE DISTURBANCE, EROSION AND SEDIMENT CONTROL MEASURES SHALL BE IN – PLACE.
- TEMPORARY INSTALLATION OF STABILIZED CONSTRUCTION ENTRANCE PADS AT ALL LOCATION WHERE CONSTRUCTION VEHICLES WILL ENTER ONTO PUBLIC STREETS. ALL PUBLIC STREETS TO BE INSPECTED AND MAINTAINED CLEAR OF SOIL ACCUMULATION.
- EXCAVATION WORK CARRIED OUT DURING PERIODS OF INCLEMENT WEATHER SHALL REQUIRE ADDITIONAL EROSION CONTROL MEASURES AS MAY BE NECESSARY BASED ON CONDITIONS.
- ADDITIONAL EROSION CONTROL METHODS INCLUDING SOIL STABILIZATION MATS. PLACEMENT OF STONE. PLACEMENT OF SOIL MAY BE REQUIRED DUE TO CLIMATIC CONDITIONS (EXCESS RAIN, ETC.)
- STABILIZATION OF DISTURBANCE AREAS TO BE PAVED BY COMPACTION AND APPLICATION OF SUBBASE WITHIN ONE MONTH AFTER UTILITIES ARE INSTALLED.
- VEGETATIVE STABILIZATION OF DISTURBED AREAS TO BE SEEDED INCLUDING R.O.W. AND EASEMENTS WITHIN TWO WEEKS OF FINAL GRADING.
- PLANS SHOW TEMPORARY SOIL EROSION AND STABILIZATION MEASURES WHICH SHALL BE MAINTAINED UNTIL ALL AREAS ARE STABILIZED.
- THE CONTRACTOR SHALL BE RESPONSIBLE TO SEED AND MULCH (OR HYDROSEED) AND TO PROVIDE AN ADEQUATE WATER SOURCE AND HOSES FOR GERMINATION OF THE SEED.
- IF THE CONTRACTOR ELECTS NOT TO INSTALL IMPORTED TOPSOIL OR SPREAD TOPSOIL FROM THE SITE THE SEEDING MAY NOT ESTABLISH ITSELF OR MAY BE SUBJECT TO STRESS FAILURE. THE OWNER SHALL TAKE COMPLETE RESPONSIBILITY FOR ESTABLISHING THE LAWN BY PROPER WATER AND FERTILIZING.

NOTES:

1. BASE MAPPING TAKEN FROM MAP REFERENCE AND FROM A FEBRUARY 2013 FIELD SURVEY BY ABD ENGINEERS & SURVEYORS.
2. THE PLANS SHOW SOME KNOWN STRUCTURE, ABOVEGROUND STRUCTURES AND/OR UTILITIES BELIEVED TO EXIST IN THE WORKING AREA. EXACT LOCATION OF WHICH MAY VARY FROM THE LOCATIONS INDICATED. IN PARTICULAR, THE CONTRACTOR IS WARNED THAT THE EXACT OR EVEN APPROXIMATE LOCATION OF SUCH PIPE LINES, SUBSURFACE STRUCTURES AND/OR UTILITIES IN THE ARE MAY BE DIFFERENT FROM THAT SHOWN OR MAY NOT BE SHOWN AND IT SHALL BE HIS RESPONSIBILITY TO PROCEED WITH GREAT CARE IN EXECUTING ANY WORK. 48 HOURS BEFORE YOU DIG, DRILL OR BLAST, CALL U.F.P.O. (1–800–962–7962), TOLL FREE.
3. AGRICULTURAL OPERATIONS EXIST THROUGHOUT THE TOWN OF NEW SCOTLAND AND THERE ARE PRESENTLY OR MAY IN THE FUTURE BE FARM USES ADJACENT TO OR IN CLOSE PROXIMITY TO THE SUBDIVIDED PREMISES. SUCH USES ARE PROTECTED BY NEW SCOTLAND'S RIGHT–TO–FARM LAW.
4. FEDERAL WETLAND DELINEATION BY INGALLS & ASSOCIATES DECEMBER 2012. NYSDEC WETLANDS CONFIRMED 4/25/13 BY NYSDEC.
5. ARMY CORP. OF ENGINEERS AND NYSDEC PERMIT IS REQUIRED PRIOR TO ANY WETLAND AREA BEING DISTURBED IN THE FUTURE BY INDIVIDUAL PROPERTY OWNERS.
6. SURVEY SHOWN IS SUBJECT TO ANY SUBSURFACE EASEMENTS, RESTRICTIONS OR CONDITIONS THAT EXIST, IF ANY.
7. UNDERGROUND UTILITIES ARE SHOWN FROM FIELD LOCATION IF POSSIBLE. OTHERS ARE SHOWN FROM RECORD DATA. THEIR EXACT LOCATION MAY BE DIFFERENT FROM THAT AS SHOWN AND OTHERS MAY EXIST.
8. THIS SURVEY HAS BEEN PREPARED IN ACCORDANCE WITH THE CODE OF PRACTICE FOR LAND SURVEYS ADOPTED BY THE NEW YORK STATE ASSOCIATION OF PROFESSIONAL LAND SURVEYORS AS LAST REVISED JULY 1997.
9. THIS SURVEY WAS PREPARED WITHOUT THE BENEFIT OF AN UP TO DATE ABSTRACT OF TITLE OR TITLE REPORT AND IS SUBJECT TO ANY STATEMENT OF FACT THAT SUCH ABSTRACT OF TITLE OR TITLE REPORT MAY REVEAL.
10. PRIOR TO ANY LAND DISTURBANCE ACTIVITIES TAKING PLACE, A "LAND DEVELOPMENT ACTIVITIES APPLICATION" MUST BE FILED WITH THE BUILDING DEPARTMENT FOR REVIEW AND APPROVAL IN ACCORDANCE WITH ARTICLE 1, SECTION 4 OF LOCAL LAW FOR STORM WATER MANAGEMENT AND EROSION AND SEDIMENT CONTROL.
11. DRIVEWAY LOCATIONS SHOWN ARE CONCEPTUAL AND HAVE TAKEN INTO ACCOUNT ADEQUATE SIGHT DISTANCE. EXACT LOCATION SHALL BE DETERMINED WITH THE APPLICATION FOR A DRIVEWAY PERMIT.
12. DRIVEWAY PERMITS ARE TO BE SECURED FROM THE DEPARTMENT OF TRANSPORTATION FOR NYS ROUTE 85A OR ALBANY COUNTY DPW FOR PICARD ROAD CR307 PRIOR TO ISSUANCE OF A BUILDING PERMIT.
13. THE GRADING SHOWN ON THESE PLANS FOR THE INDIVIDUAL LOTS IS FOR PLANNING PURPOSES ONLY. IF GUTTER DRAINS ARE TO BE INSTALLED, THEY SHALL BE MORE THAN 10 FEET AWAY FROM ANY IMPERVIOUS SURFACE. THE INTENT OF THE GRADING IS TO ENSURE ALL IMPERVIOUS SURFACES DRAIN TOWARDS THE DESIGNATED STORMWATER AREAS. CHANGES MAY OCCUR PROVIDED THAT A SITE PLAN SHOWING THE PROPOSED GRADING IS SUBMITTED TO THE BUILDING INSPECTOR FOR APPROVAL WITH THE BUILDING PERMIT APPLICATION.

MAP REFERENCE:

"MINOR SUBDIVISION PLAT, LANDS N/F OF JEANNE PICARD FISH, 103 PICARD ROAD" PREPARED BY INGALLS & ASSOCIATES, LLP AND DATED NOVEMBER 13, 2012.

ZONING: RESIDENTIAL AGRICULTURAL RA

LOT AREA: 44,000 SF MIN.
LOT WIDTH: 140' MIN.

SETBACKS:
FRONT: 40' PICARD ROAD, 70' NEW SALEM ROAD
SIDE: 25'
REAR: 30'

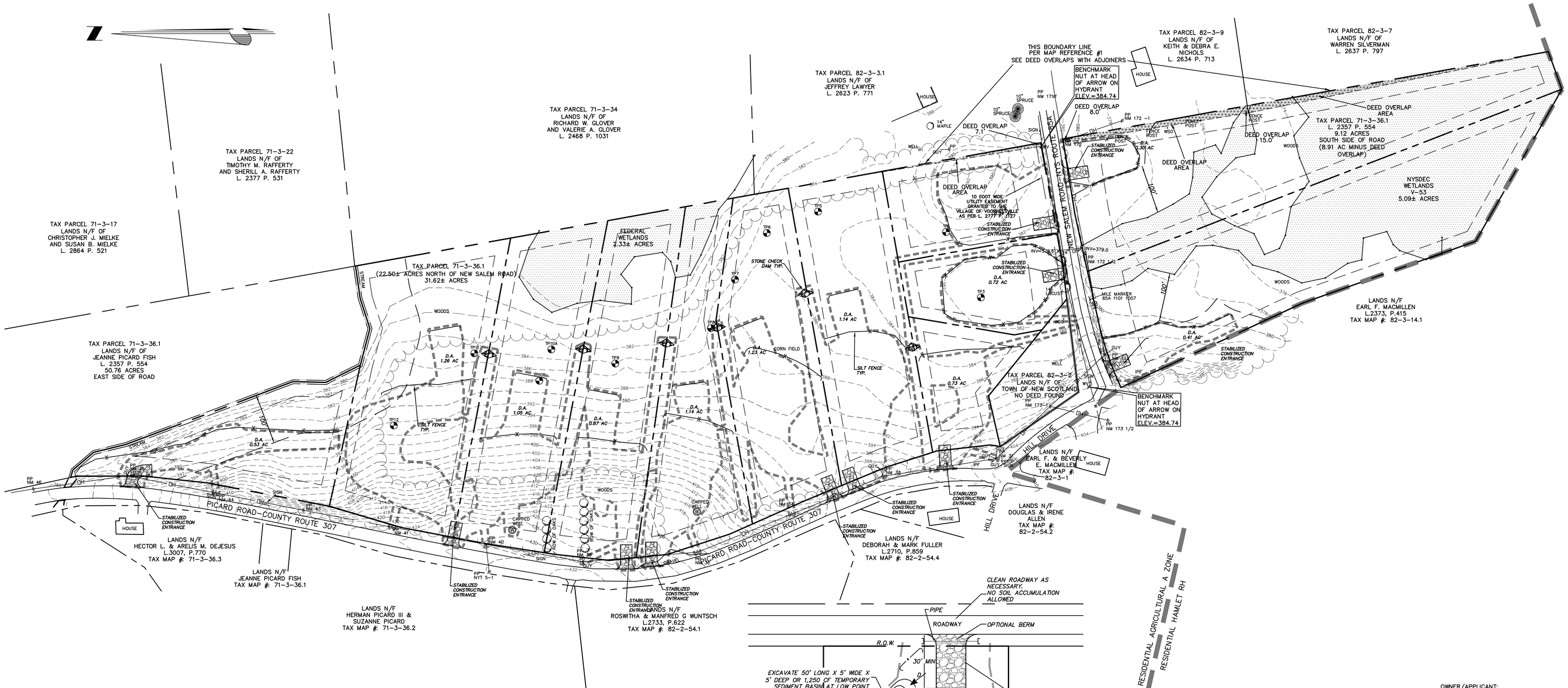

SOIL DATA : PERFORMED BY ABD ENGINEERS & SURVEYORS 12/4/12 AND WITNESSED BY ALBANY COUNTY HEALTH DEPARTMENT

TEST PIT 1:
0–40" YELLOW SILT SAND
40"–84" BROWN COARSE SAND
NO GROUNDWATER
NO MOTTLING
PERC TEST: 1" IN 8 MINUTES @ 30"

TEST PIT 3:
0–48" YELLOW SILT SAND
48"–96" BROWN COARSE SAND
NO GROUNDWATER
NO MOTTLING
PERC TEST: 1" IN 11 MINUTES @ 48"

TEST PIT 5:
0–44" YELLOW SILT SAND
44"–90" BROWN COARSE SAND
NO GROUNDWATER
NO MOTTLING

TEST PIT 6:
0–36" YELLOW SILT SAND
36"–90" BROWN COARSE SAND
NO GROUNDWATER
NO MOTTLING
PERC TEST: 1" IN 2 MINUTES @ 24"

TEST PIT 7:
0–48" YELLOW SILT SAND
48"–96" BROWN COARSE SAND
NO GROUNDWATER
NO MOTTLING

TEST PIT 8:
0–48" YELLOW SILT SAND
48"–90" BROWN COARSE SAND
NO GROUNDWATER
NO MOTTLING
PERC TEST: 1" IN 1 MINUTE @ 54"

TEST PIT 9:
0–12" YELLOW SILT SAND
12"–78" BROWN COARSE SAND
NO GROUNDWATER
NO MOTTLING
PERC TEST: 1" IN 16 MINUTES @ 12"

TEST PIT 10A:
0–24" YELLOW SILT SAND
24"–54" FINE SILT SAND
54"–72" SANDY SILT CLAY
MOTTLING @ 54"
WATER SEEPAGE @ 72"

TEST PIT 10B:
0–39" YELLOW SILT SAND
39"–84" BROWN COARSE SAND
NO GROUNDWATER
NO MOTTLING
PERC TEST: 1" IN 11 MINUTES @ 39"

TEST PIT 11:
0–18" YELLOW SILT SAND
18"–66" BROWN COARSE SAND
NO GROUNDWATER
NO MOTTLING
PERC TEST: 1" IN 40 MINUTES @ 18"

TEST PIT 12:
0–72" BROWN COARSE SAND
NO GROUNDWATER
NO MOTTLING
PERC TEST: 1" IN 21 MINUTES @ 12"

NOTE: USE DEEP TRENCH SEPTIC SYSTEM WITHIN BROWN COARSE SAND LAYER. BROWN COARSE SAND LAYER HAS A PERC RATE OF 1" IN 2 MINUTES. DESIGN RATE SHOULD BE 1" IN 10 MINUTES.

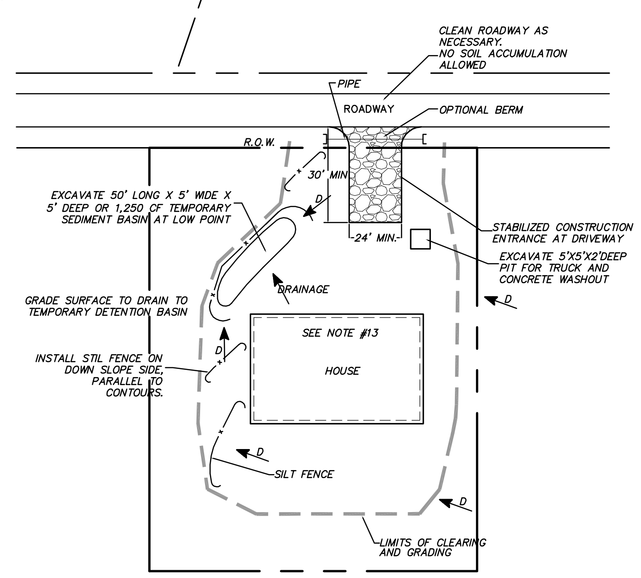

TYPICAL LOT DETAIL

NO SCALE

OWNER/APPLICANT:
MICHAEL BIERNACKI
MJ BIERNACKI BUILDERS, LLC
32 SMITH LANE
VOORHEESVILLE, NY 12186

PORTION OF TAX MAP #:71.00–3–36.1

NO.	REVISION	BY	DATE
2.	TOE COMMENTS	JKL	4/26/13
1.	2ND SUBMISSION	JKL	2/26/13

ALTERATION OF THIS DOCUMENT EXCEPT BY A LICENSED PROFESSIONAL ENGINEER IS ILLEGAL

JOSEPH J. BIANCHINE, P.E.
N.Y.S. LICENSE NO. 50226

ALBANY COUNTY DEPARTMENT OF HEALTH

TOWN OF NEW SCOTLAND

EROSION & SEDIMENT CONTROL PLAN BIERNACKI SUBDIVISION 103 PICARD ROAD

TOWN OF NEW SCOTLAND | COUNTY OF ALBANY
STATE OF NEW YORK

ABD ENGINEERS & SURVEYORS
411 Union Street Schenectady, N.Y. 12305
518–377–0315 Fax.518–377–0379

DATE:	SCALE:	DWG.	SHEET OF
JANUARY 21, 2013	1"=100'	3471A–S7	2 5